PROJECT REFERENCE NO.	SHEET NO.
R-5968EA	2D-1

HYDRAULICS ENGINEER

NORTH CAROLINA PROFESSIONAL SEAL 040377 ENGINEER ROBERT S. TUCKER 5/21

SUBMERGED GRAVEL WETLAND SYSTEM DETAILS

DETAIL A

SUBMERGED GRAVEL WETLAND SYSTEM

N.T.S.

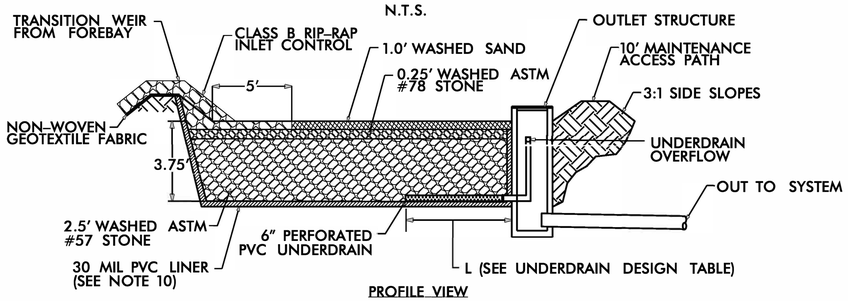

PROFILE VIEW

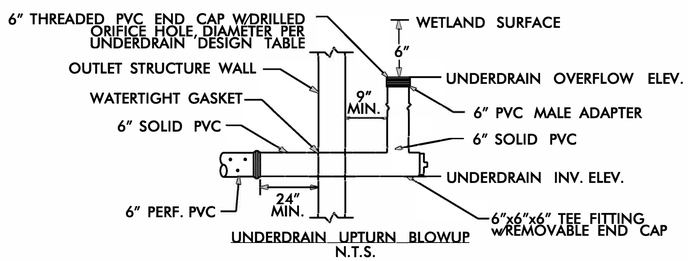

UNDERDRAIN UPTURN BLOWUP

N.T.S.

SUBMERGED GRAVEL WETLAND ELEVATIONS TABLE

SITE NO.	OUTLET TYPE	TOP (WEIR) ELEV.	UNDERDRAIN OVERFLOW ELEV.	BASIN SURFACE ELEV.	BASIN BOTTOM/ UNDERDRAIN INV. ELEV.	BOTTOM SAND ELEV.	BOTTOM #78 STONE EL.
1	2OTCB (STD. 840.04)	259.0'	256.5'	257.0'	253.3'	256.0'	255.8'

DETAIL B

FOREBAY

N.T.S.

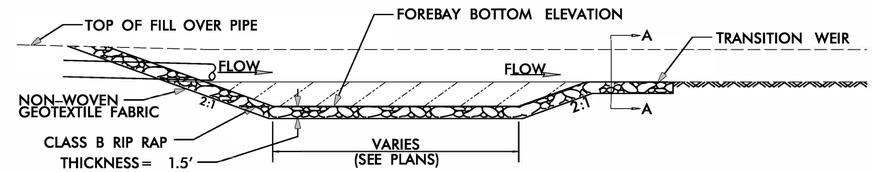

PROFILE VIEW

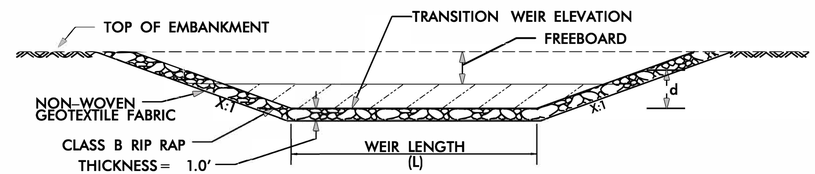

SECTION A-A
"TRANSITION BERM CROSS-SECTION"

FOREBAY MINIMUM DIMENSIONS TABLE

SITE NO.	FOREBAY BOTTOM ELEV.	TRANSITION WEIR ELEV.	TRANSITION WEIR LENGTH (L)	WEIR SIDE SLOPES (X:1)	d
1 (S FOREBAY)	257.0'	260.0'	8.0'	2	1.0'
1 (NE FOREBAYS)	257.0'	260.0'	8.0'	2	1.0'

DETAIL C

PERFORATED HOLE PLACEMENT

N.T.S

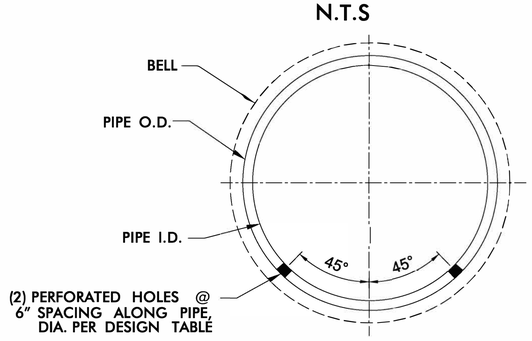

UNDERDRAIN DESIGN TABLE

SITE NO.	UNDERDRAIN PIPE LENGTH (L)	PERFORATED HOLE DIAMETER	PERFORATED HOLE SPACING	END CAP ORIFICE DIAMETER
1	8'	0.375"	0.5'	0.65"

NOTES:

1. WASHED SAND SHALL BE ACCORDING TO PROJECT SPECIAL PROVISIONS.
2. ALL AGGREGATE SHALL BE WASHED AND FREE OF FINES BEFORE INSTALLATION.
3. CONTRACTOR SHALL USE HYDRAULIC CEMENT TO SEAL ALL CONCRETE OPENINGS AND JOINTS TO PREVENT LEAKING.
4. CONTRACTOR SHALL INCLUDE TERMINATION VENT SCREEN ON OPEN ENDS OF ALL 6 INCH SCHEDULE 40 PVC DRAINAGE PIPES.
5. CONTRACTOR SHALL INSTALL AND SECURE 6 INCH SCHEDULE 40 PVC DRAINAGE PIPES PRIOR TO BACKFILLING WASHED ASTM STONE AND WASHED SAND. DURING BACKFILLING CONTRACTOR SHALL TEMPORARILY CAP 6 INCH SCHEDULE 40 PVC DRAINAGE PIPES TO PREVENT PIPES FROM CLOGGING.
6. HORIZONTAL PLACEMENT OF THE UNDERDRAIN SHALL BE IN ACCORDANCE WITH THE APPROVED IMPROVEMENT PLANS, OR AS INDICATED BY THE PROJECT ENGINEER.
7. PERFORATED PLASTIC PIPE SHALL BE SMOOTH-WALL PVC PLASTIC PIPE OR CORRUGATED PVC PLASTIC PIPE WITH A SMOOTH INTERIOR SURFACE, MADE OF PVC PLASTIC HAVING A CELL CLASSIFICATION OF 12454 OR 13364, AS DEFINED IN ASTM D1784.
8. PIPE, FITTING, AND JOINT DIMENSIONS SHALL BE COMPATIBLE AND MEASURED IN ACCORDANCE WITH ASTM D 2122. FITTING AND JOINT MATERIAL SHALL BE COMPATIBLE WITH THE PIPE MATERIAL.
9. PIPE PENETRATIONS THROUGH PRECAST STRUCTURES SHALL BE SEALED ACCORDING TO PROJECT SPECIFICATIONS.
10. NON-WOVEN GEOTEXTILE FABRIC SHALL BE PLACED ON BOTH SIDES OF PVC LINER. LINER AND GEOTEXTILE SHALL BE ATTACHED TO OUTLET STRUCTURE (ALL SIDES) USING A BATTEN BAR AND ANCHORS (SEE DETAIL F, SHEET 2D-2). UNDERDRAIN PENETRATION THROUGH PVC LINER SHALL BE SEALED ACCORDING TO DETAIL G, SHEET 2D-2.

TETRA TECH
ENGINEERING, PC
One Park Drive, Suite 200
PO Box 14409
Research Triangle Park, NC 27709
Tel: (919) 485-8278
Fax: (919) 485-8280
License: C-2644

$$$$SYSTIME$$$$
$$$$USERNAME$$$$
$$$$USERNAME$$$$
$$$$SYSTIME$$$$