PROJECT REFERENCE NO.	SHEET NO.
R-5968EA	2D-2

HYDRAULICS ENGINEER

NORTH CAROLINA PROFESSIONAL SEAL 040377 ENGINEER ROBERT S. TUCKER 8/4/21

SUBMERGED GRAVEL WETLAND SYSTEM DETAILS

DETAIL D

OUTLET CONTROL STRUCTURE

N.T.S.

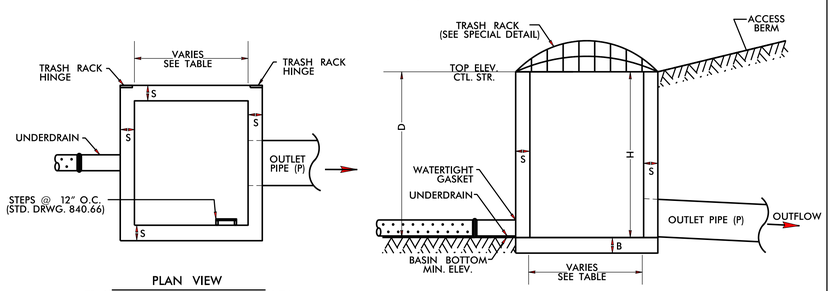

PLAN VIEW

TRASH RACK NOT SHOWN FOR CLARITY

PROFILE

MINIMUM DIMENSIONS FOR DRAWDOWN STRUCTURE														
SITE	STRUCTURE NUMBER	S (INCHES) 6" MIN.	B (INCHES) 6" MIN.	BASIN BOTTOM MINIMUM ELEV.	TOP ELEVATION CONTROL STRUCTURE	UNDERDRAIN INV. IN	OUTLET PIPE INV.	INV. ELEV. CTL. STR.	CTL. STR. DIMENSIONS			OUTLET PIPE DIAMETER(P) INCHES	OUTLET PIPE MATERIAL
									W	L	H		
1	0403	6	6	253.3'	259.0'	253.3'	252.7'	252.7'	2'-8"	4'-0"	6'-4"	24	RCP-III

OUTLET CONTROL STRUCTURE NOTES:

1. NO BEDDING MATERIAL TO BE USED. THEREFORE, DO NOT FOLLOW STANDARD DRAWINGS FOR METHOD OF PIPE INSTALLATION FOR OUTLET PIPE THROUGH EMBANKMENT.

2. ENSURE TRASH RACK OPENS FREELY

3. FOR SITES 1 AND 2, THE OUTLET CONTROL STRUCTURE (STRUCTURES 0403 & 0503) SHALL BE PRECAST AND DESIGNED ACCORDING TO NCDOT STD 840.04, BUT WITH NO SLAB TOP OR CURB INLET OPENINGS.

4. FOR THE SITE 3 OUTLET CONTROL STRUCTURE (STRUCTURE 0603), THE CONTRACTOR SHALL MODIFY THE EXISTING DROP INLET BY RAISING THE RIM ELEVATION ACCORDING TO NCDOT STD 840.05, BUT WITH NO SLAB TOP OR CURB INLET OPENINGS. THE PROPOSED BRICK RISER STRUCTURE SHALL MATCH THE HORIZONTAL DIMENSIONS OF THE EXISTING DI AND BE SET ON A LEVEL COURSE OF MORTAR AS NEEDED. THE RIM OF THE BRICK STRUCTURE SHALL BE LEVELED WITH MORTAR PRIOR TO INSTALLATION OF THE TRASH RACK.

DETAIL E

REBAR TRASH RACK

N.T.S.

RISER TRASH RACK NOTES:
1) ALL JOINTS SHALL BE FULLY WELDED AROUND JOINT WITH A MINIMUM OF A *" BEAD.
2) IF BOLTS ARE ANCHORED IN CONCRETE, FOLLOW STD. DWG. 862.03 AND 862.04 FOR ANCHORING PROCEDURE.
3) EYEBOLT FOR CHAIN CLOSURE SHALL BE INSTALLED BY THE SAME METHOD AS THE HINGE PLATE BOLTS.
4) RACK AND HARDWARE SHALL BE ALUMINUM OR REBAR AND GALVANIZED IN ACCORDANCE WITH ASTM A-153.
5) PROVIDE OPENING IN TRASH RACK TO ACCOMODATE SLUICE GATE, IF APPLICABLE, ON THE OUTLET PIPE. ENSURE TRASH RACK OPENS FREELY AND WITHOUT INTERFERENCE WITH SLUICE GATES.

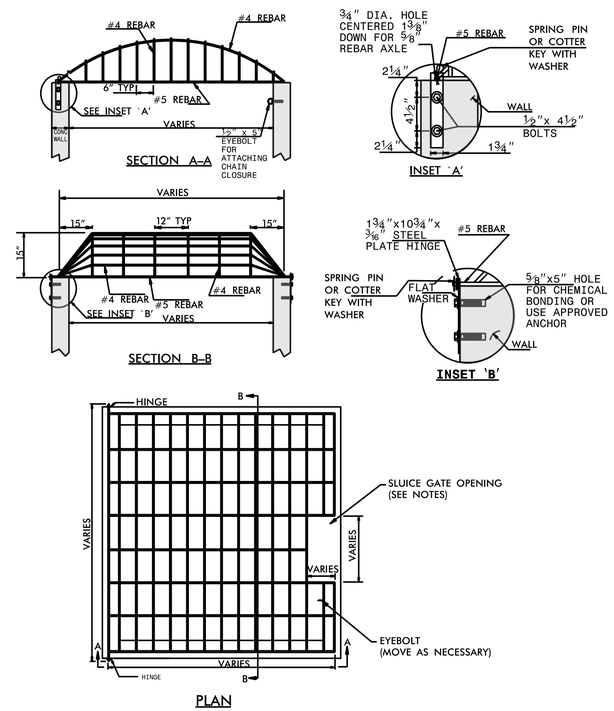

DETAIL F

LINER ATTACHMENT

N.T.S.

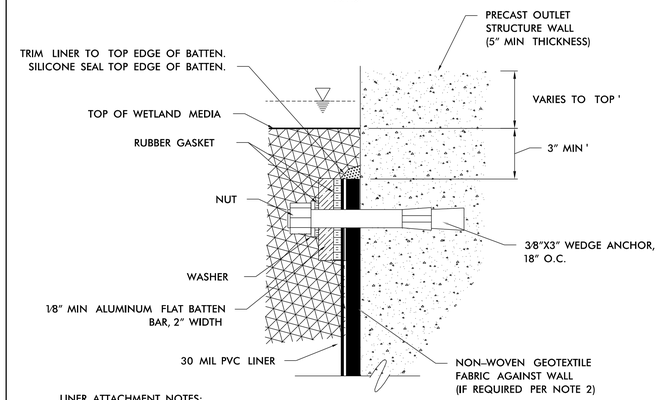

LINER ATTACHMENT NOTES:

1. THE SURFACE OF THE OUTLET STRUCTURE TO WHICH THE GEOMEMBRANE LINER IS TO BE ATTACHED SHALL BE REMOVED OF IRREGULARITIES ON THE CONCRETE SURFACE PRIOR TO INSTALLATION.
2. IF IRREGULARITIES (I.E., SHARP PROTRUSIONS EXCEEDING 1/2 INCH FROM SURFACE FACE) CAN NOT BE REMOVED FROM A FORMED STRUCTURE, A PROTECTIVE GEOTEXTILE LAYER SHOULD BE PLACED BETWEEN THE SURFACE AND THE GEOMEMBRANE WITHIN VICINITY OF PROTRUSIONS.
3. REFER TO PLANS FOR VERTICAL DIMENSIONS OF WETLAND MEDIA COMPONENTS.
4. VERIFY GEOTEXTILE MANUFACTURER'S INSTALLATION RECOMMENDATIONS WITH ENGINEER FOR APPROVAL.

DETAIL G

LINER PENETRATION

N.T.S.

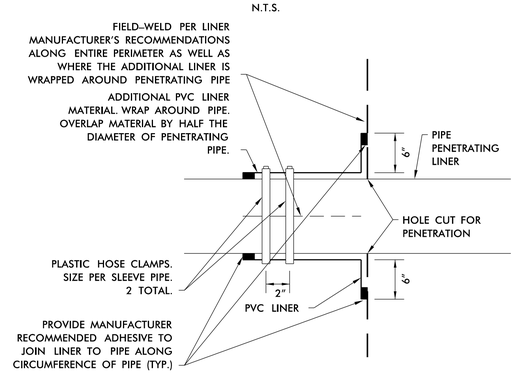

TETRA TECH
ENGINEERING, PC

One Park Drive, Suite 200
PO Box 14409
Research Triangle Park, NC 27709
Tel: (919) 485-8278
Fax: (919) 485-8280
License: C-2644

$$$