PROJECT REFERENCE NO.	SHEET NO.
R-5968EA	EC-2

HYDRAULICS ENGINEER

NORTH CAROLINA PROFESSIONAL SEAL 040377 ENGINEER ROBERT S. TUCKER 3/4/21

EROSION AND SEDIMENT CONTROL STANDARD DETAILS

STATE OF NORTH CAROLINA DEPT. OF TRANSPORTATION DIVISION OF HIGHWAYS RALEIGH, N.C.

ENGLISH STANDARD DRAWING FOR **TEMPORARY SILT FENCE**

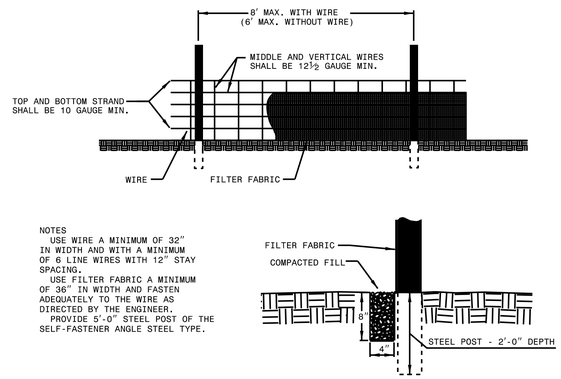

NOTES
USE WIRE A MINIMUM OF 32" IN WIDTH AND WITH A MINIMUM OF 6 LINE WIRES WITH 12" STAY SPACING.
USE FILTER FABRIC A MINIMUM OF 36" IN WIDTH AND FASTEN ADEQUATELY TO THE WIRE AS DIRECTED BY THE ENGINEER.
PROVIDE 5'-0" STEEL POST OF THE SELF-FASTENER ANGLE STEEL TYPE.

SHEET 1 OF 1 **1605.01**

STATE OF NORTH CAROLINA DEPT. OF TRANSPORTATION DIVISION OF HIGHWAYS RALEIGH, N.C.

ENGLISH STANDARD DRAWING FOR **TEMPORARY SILT FENCE**

SHEET 1 OF 1 **1605.01**

STATE OF NORTH CAROLINA DEPT. OF TRANSPORTATION DIVISION OF HIGHWAYS RALEIGH, N.C.

ENGLISH STANDARD DRAWING FOR **SPECIAL SEDIMENT CONTROL FENCE**

GENERAL NOTES:

USE NO. 5 OR NO. 57 STONE FOR SEDIMENT CONTROL STONE.

USE HARDWARE CLOTH 24 GAUGE WIRE MESH WITH 1/4 INCH MESH OPENINGS.

INSTALL 5 FT. SELF FASTENER ANGLE STEEL POST 2 FT. DEEP MINIMUM.

SPACE POST A MAXIMUM OF 3 FT.

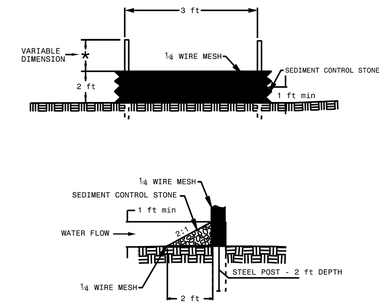

SHEET 1 OF 1 **1606.01**

STATE OF NORTH CAROLINA DEPT. OF TRANSPORTATION DIVISION OF HIGHWAYS RALEIGH, N.C.

ENGLISH STANDARD DRAWING FOR **SPECIAL SEDIMENT CONTROL FENCE**

SHEET 1 OF 1 **1606.01**

STATE OF NORTH CAROLINA DEPT. OF TRANSPORTATION DIVISION OF HIGHWAYS RALEIGH, N.C.

ENGLISH STANDARD DRAWING FOR **SPECIAL STILLING BASIN**

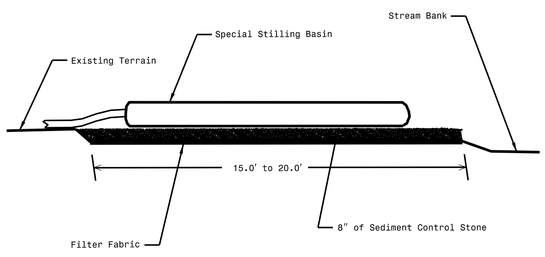

Note: Provide Stabilized Outlet to Streambank
Not To Scale

SHEET 1 OF 1 **1630.06**

STATE OF NORTH CAROLINA DEPT. OF TRANSPORTATION DIVISION OF HIGHWAYS RALEIGH, N.C.

ENGLISH STANDARD DRAWING FOR **SPECIAL STILLING BASIN**

SHEET 1 OF 1 **1630.06**

STATE OF NORTH CAROLINA DEPT. OF TRANSPORTATION DIVISION OF HIGHWAYS RALEIGH, N.C.

ENGLISH STANDARD DRAWING FOR **ROCK INLET SEDIMENT TRAP TYPE 'A'**

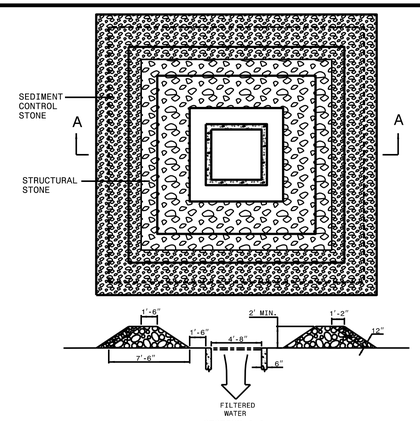

SECTION A-A

NOTE:
CLEAN SEDIMENT WHEN FULL OR AS DIRECTED BY ENGINEER.
USE NO. 5 OR NO. 57 STONE FOR SEDIMENT CONTROL.
USE CLASS 'B' STONE FOR STRUCTURAL STONE.
CONSTRUCT TOP OF BERM A MINIMUM OF ONE FOOT BELOW THE SHOULDER OR ANY DIVERSION POINT.

SHEET 1 OF 1 **1632.01**

STATE OF NORTH CAROLINA DEPT. OF TRANSPORTATION DIVISION OF HIGHWAYS RALEIGH, N.C.

ENGLISH STANDARD DRAWING FOR **ROCK INLET SEDIMENT TRAP TYPE 'A'**

SHEET 1 OF 1 **1632.01**

STATE OF NORTH CAROLINA DEPT. OF TRANSPORTATION DIVISION OF HIGHWAYS RALEIGH, N.C.

ENGLISH STANDARD DRAWING FOR **GRAVEL CONSTRUCTION ENTRANCE**

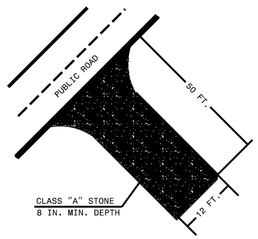

NOTES:
1. PROVIDE TURNING RADIUS SUFFICIENT TO ACCOMMODATE LARGE TRUCKS.
2. LOCATE ENTRANCE(S) TO PROVIDE FOR UTILIZATION BY ALL CONSTRUCTION VEHICLES.
3. MUST BE MAINTAINED IN A CONDITION WHICH WILL PREVENT TRACKING OR DIRECT FLOW OF MUD ONTO STREETS. PERIODIC TOPDRESSING WITH STONE WILL BE NECESSARY.
4. ANY MATERIAL TRACKED ONTO THE ROADWAY MUST BE CLEANED UP IMMEDIATELY.
5. LOCATE GRAVEL CONSTRUCTION ENTRANCE AT ALL POINTS OF INGRESS AND EGRESS UNTIL SITE IS STABILIZED. PROVIDE FREQUENT CHECKS OF THE DEVICE AND TIMELY MAINTENANCE.
6. NUMBER AND LOCATION OF CONSTRUCTION ENTRANCES TO BE DETERMINED BY THE ENGINEER.
7. USE CLASS 'A' STONE OR OTHER COARSE AGGREGATE APPROVED BY THE ENGINEER.

NOTE: PLACE FILTER FABRIC BENEATH STONE

SHEET 1 OF 1 **1607.01**

STATE OF NORTH CAROLINA DEPT. OF TRANSPORTATION DIVISION OF HIGHWAYS RALEIGH, N.C.

ENGLISH STANDARD DRAWING FOR **GRAVEL CONSTRUCTION ENTRANCE**

SHEET 1 OF 1 **1607.01**

MATTING INSTALLATION DETAIL

1631.01

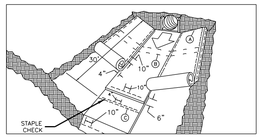

MATTING IN DITCHES

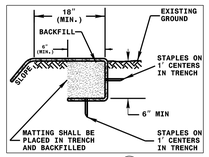

DIAGRAM (A)

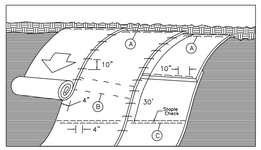

MATTING ON SLOPES

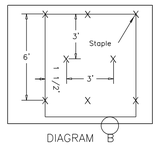

DIAGRAM (B)

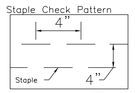

DIAGRAM (C)

NOTES:

THIS DETAIL APPLIES TO STRAW, EXCELSIOR, AND PERMANENT SOIL REINFORCEMENT MAT (PSRM) INSTALLATION.

STAPLES SHALL BE NO. 11 GAUGE STEEL WIRE FORMED INTO A "U" SHAPE WITH A MINIMUM THROAT WIDTH OF 1 INCH AND NOT LESS THAN 6 INCHES IN LENGTH.

NOT TO SCALE

WATTLE BARRIER DETAIL

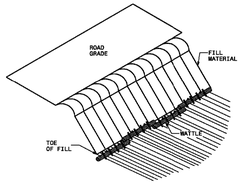

ISOMETRIC VIEW

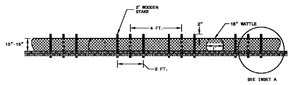

FRONT VIEW

NOTES:

USE MINIMUM 18 IN. NOMINAL DIAMETER EXCELSIOR WATTLE AND LENGTH OF 10 FT.

EXCAVATE A 2 TO 3 INCH TRENCH FOR WATTLE TO BE PLACED.

DO NOT PLACE WATTLES ON TOE OF SLOPE.

USE 2 FT. WOODEN STAKES WITH A 2 IN. BY 2 IN. NOMINAL CROSS SECTION.

INSTALL A MINIMUM OF 2 UPSLOPE STAKES AND 4 DOWNSLOPE STAKES AT AN ANGLE TO WEDGE WATTLE TO GROUND.

PROVIDE STAPLES MADE OF 0.120 IN. DIAMETER STEEL WIRE FORMED INTO A U SHAPE NOT LESS THAN 12" IN LENGTH.

INSTALL STAPLES APPROXIMATELY EVERY 1 LINEAR FOOT ON BOTH SIDES OF WATTLE AND AT EACH END TO SECURE IT TO THE SOIL.

FOR BREAKS ALONG LARGE SLOPES, USE MAXIMUM SPACING OF 20 FT.

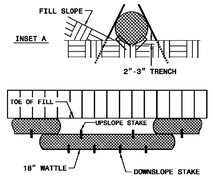

TOP VIEW

TETRA TECH
ENGINEERING, PC

One Park Drive, Suite 200
PO Box 14409
Research Triangle Park, NC 27709
Tel: (919) 485-8278
Fax: (919) 485-8280
License: C-2644